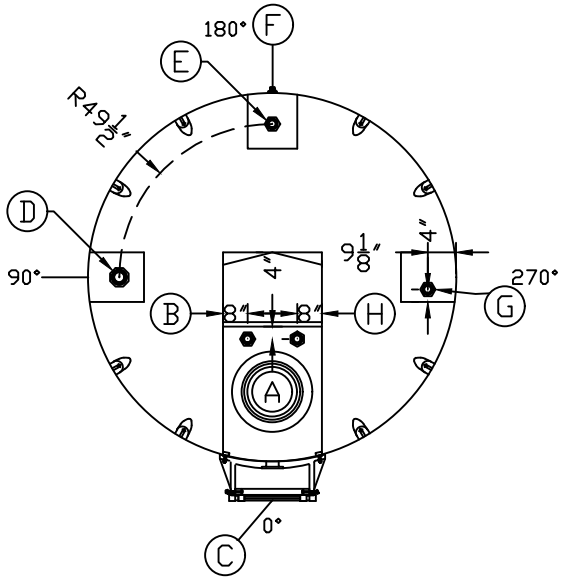

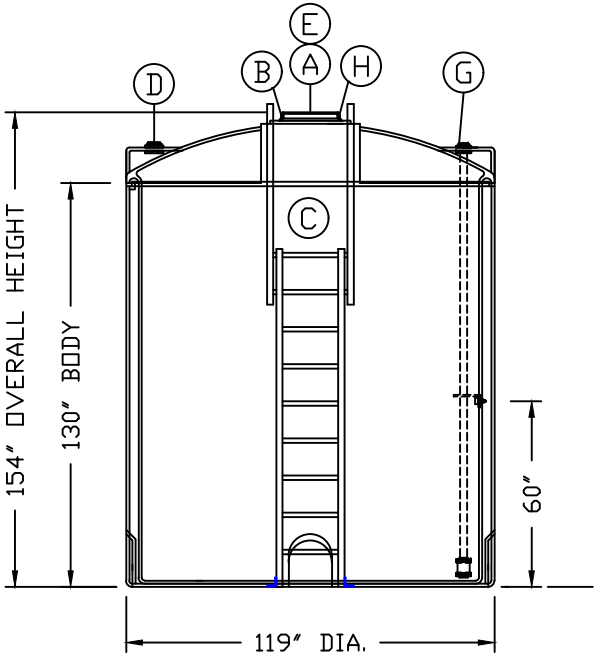

ACCESSORIES					
MK	SIZE	DESCRIPTION	DEG	ELEV	DOME
A	16"	MANWAY W/ LEVER LOCK COVER	0°	-	X
B	2"	BULKHEAD FITTING W/ EPDM GASKET (LEVEL TRANSMITTER)	0°	SEE	DWG
C	13'	FIBERGLASS REINFORCED LADDER	45°	-	-
D	3"	BULKHEAD FITTING W/ EPDM GASKET (VENT)	90°	-	X
E	2"	BULKHEAD FITTING W/ EPDM GASKET & ANTI FOAM ELBOW ASSY (FILL)	180°	-	X
F	.75"	BULKHEAD FITTING W/ EPDM GASKET (LEAK DETECTION PORT)	180°	134"	-
G	2"	BULKHEAD FITTING W/ EPDM GASKET & DROP TUBE ASSY W/ ENCAPSULATED DONKER BOLTS & TRUE UNION CHECK VALVE (OUTLET)	270°	-	X
H	2"	BULKHEAD FITTING W/ EPDM GASKET (LEVEL SWITCH)	0°	SEE	DWG

GENERAL NOTES:

1. LOCATE FITTINGS FROM PLAN VIEW.
2. TANK(S) MUST BE INSTALLED PER ASSMANN CORPORATION USAGE & GUIDELINES.
3. FLEXIBLE EXPANSION JOINTS MUST BE USED ON ALL SIDEWALL CONNECTIONS TO MAINTAIN FACTORY WARRANTY.
4. TANKS ARE BUILT PER ASTM D 1998.
5. ASSMANN CORPORATION REQUIRES ALL TANKS BE VENTED. MINIMUM VENT SIZE TO BE 1.5 TIMES THE LARGEST INLET OR OUTLET CONNECTION SIZE.

REV	REVISION DESCRIPTION	REV DATE

BCS02-NITRIC ACID

Assmann CORPORATION OF AMERICA
300 N TAYLOR ROAD
GARRETT, IN 46738
PHONE: (260) 357-3181
FAX: (260) 357-3738

CUSTOMER APPROVAL: 92907

OVERALL TANK WEIGHT: 3213 LBS.

PRIMARY VESSEL		SECONDARY VESSEL	
SPECIFIC GRAVITY	1.9 SP.G. MAX	SPECIFIC GRAVITY	1.5 SP.G. MAX
RESIN USED: EXXON PAXON CROSSLINK POLYETHYLENE	TANK WEIGHT: 1753 LBS.	RESIN USED: EXXON PAXON CROSSLINK POLYETHYLENE	TANK WEIGHT: 1460 LBS.
	TANK COLOR: NATURAL		TANK COLOR: NATURAL

TITLE: IMT 5250 GAL.
DOUBLE WALL STORAGE TANK

STAINLESS TECHNOLOGIES LLC.

ALL DIMENSIONS ARE IN INCHES AND ARE ±3%

DRAWN BY: R.HUTH
DRAWN DATE: 7/6/21
DWG NUMBER: 99941-2
REV: A